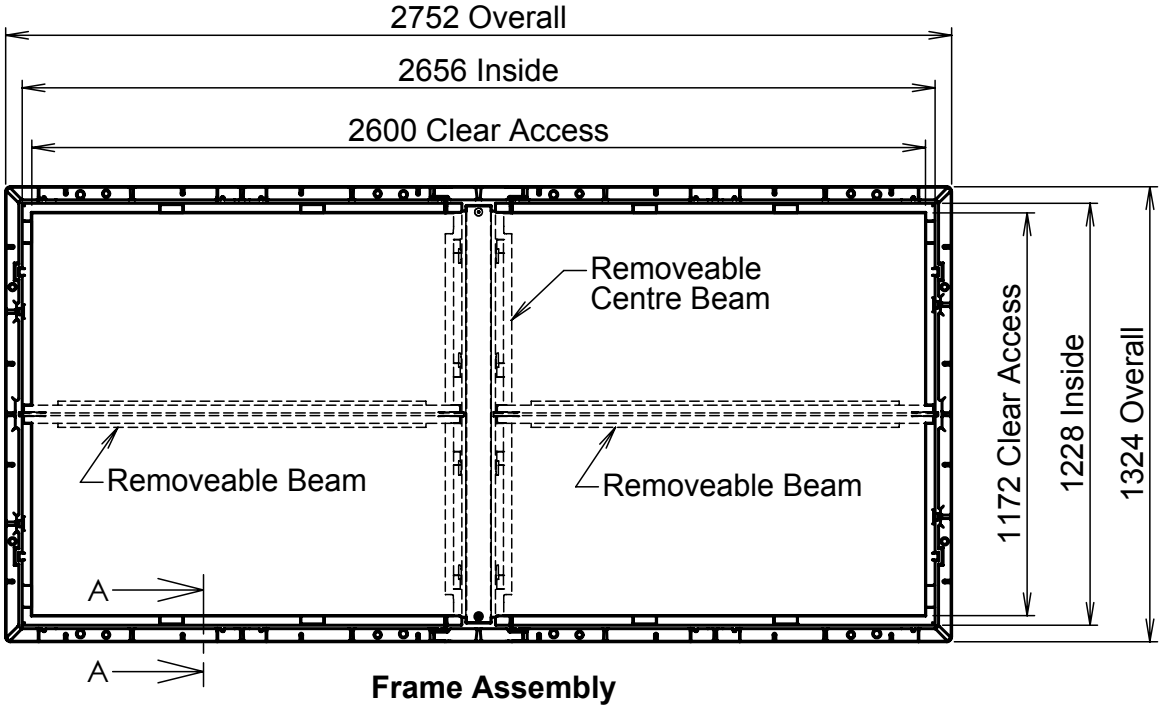

Frame Assembly

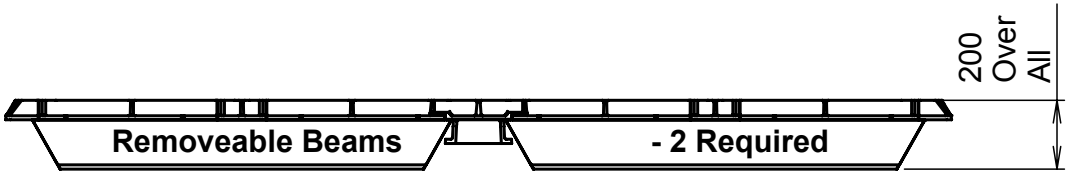

Removeable Beams - 2 Required

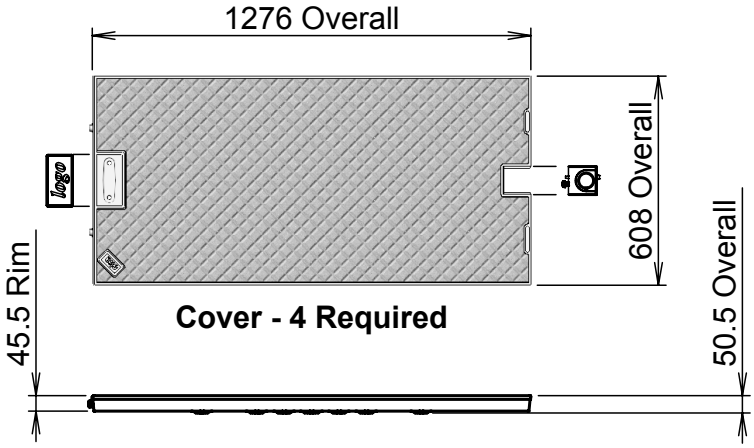

Cover - 4 Required

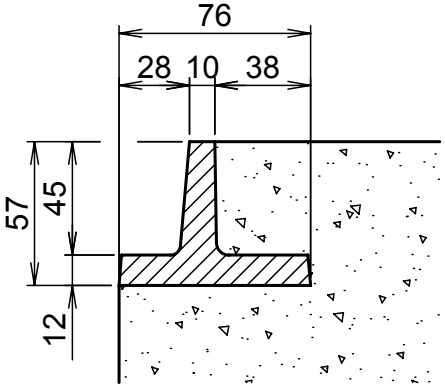

Section A-A
Typ Frame